VESSEL®
your solution partner

(Clip type)

High-speed fan makes it!

Ionizing performance keeps fresh and highest even when the filter got dirty.

This unique, super ionizer does not request any spec of installation place and time.

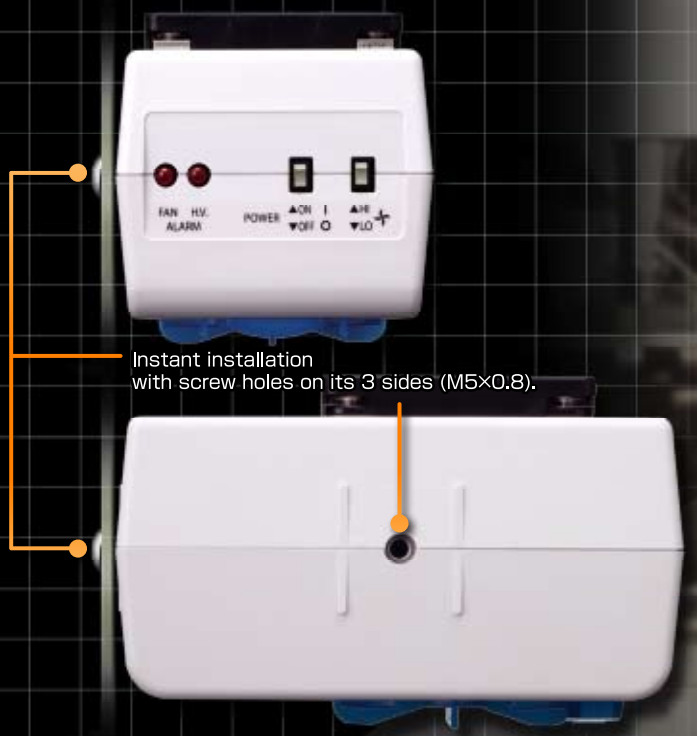

Instant installation
with screw holes on its 3 sides (M5×0.8).

While in operation,
the interior LED lights
brightly to check for dirt
on the electrode needles
from outside.

By detaching the louver,
the needles can be easily
cleaned.
Automatic shutoff for
electrode over the needles.

STAT·CLEAN F6CL-E

Ionizing Mini-Fan with Clip

EDP No.621632

CE RoHS

VESSEL Ionizing Mini-Fan with Clip No.F6CL-E

VESSEL
your solution partner

Fully-loaded with advanced features

- Highly reliable piezoelectric AC method is adopted for superior ion balance of within ±10V.
- Compact and space-saving. Ideal for installation on cell production benches.
- Fan speed can be switched to HIGH or LOW setting.
- Interior LED light lets you check for dirt on the electrode needles visually.

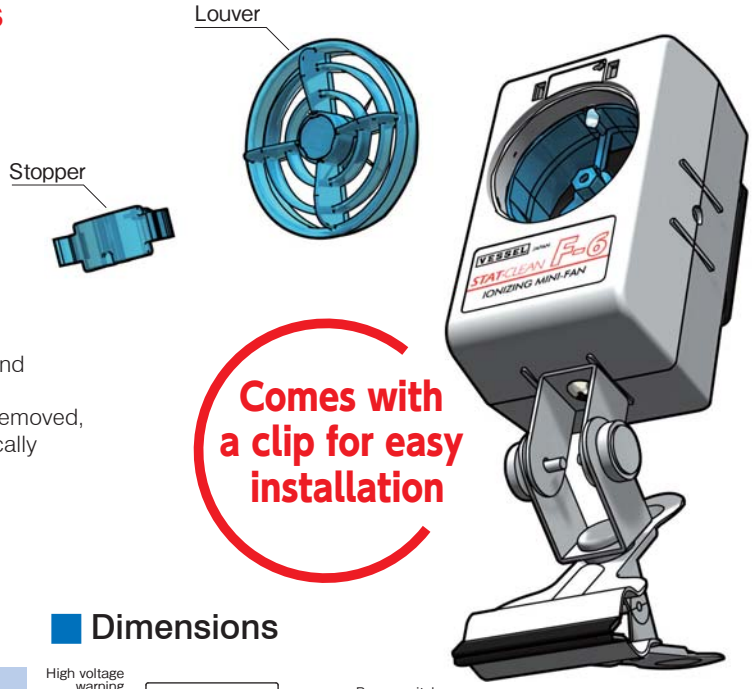

Designed for maximum safety and ease of maintenance

- Low voltage 24V DC power supply minimizes electrical leakage and interference with nearby devices.
- Louver (electrode needle unit) can be detached if the stopper is removed, which improves the efficiency of maintenance. The unit automatically turns off when the stopper is removed.
- Highly efficient ionizing method minimizes ozone production.
- Warning indicator notifies you if the fan locks up or abnormally high voltage is detected.

Specifications

Model No.	F6CL-E (with Clip)
Ionizing method	High-frequency AC corona discharge
Applied voltage	AC3.5kV
Power supply and current consumption	DC24V±5% 253mA(typ.)
H×W×D	Unit only 131×77×81mm (Protruding parts & clip excluded)
Weight	514g (clip included)
Fan speed	0.87m³/min [Fan speed: HI] 0.4m³/min [Fan speed: LOW]
Noise level	58.5dB [Fan speed: HI] 40.4dB [Fan speed: LOW]
Ozone production	0.05ppm or less (measured 50mm from device)
Operating temperature and humidity	5~40℃ 35~65%RH (No condensing, no freezing)
Ionizing distance	150mm~600mm
Decay time	Please refer to the static erasing performance chart.
Ion balance	Within ±10V (measured 300mm from device, before shipment)
Accessories	Power supply transformer No. AD24-ITF6-E AC cable (1.8m)
Replacement parts	Electrode needle unit F-6H Filter SDJ-08F

Dimensions

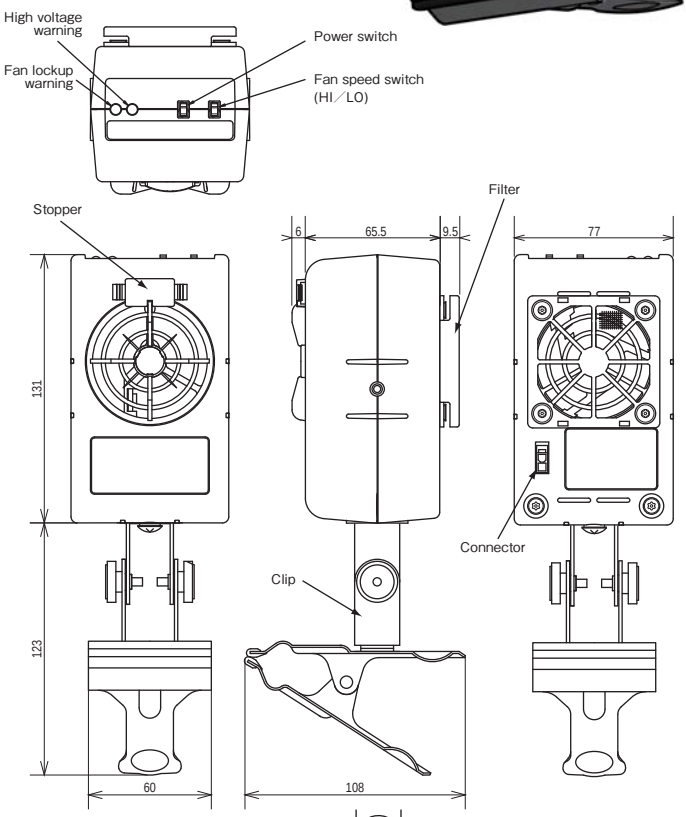

Static erasing performance

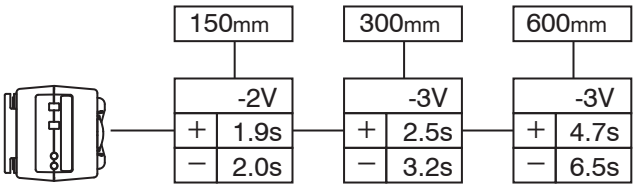

Charged plate monitor:TREK 158, **which conforms to ANSI EOS/ESD S3.1, was used for measurement.**
Measurement conditions: Max. fan speed, **Temperature:** 25℃, **Humidity:** 50%
Top: Ion balance
Middle: Decay time required for static discharge from +1000V to +100V
Bottom: Decay time required for static discharge from –1000V to –100V

※Static electricity erasing capability values given in this catalog were obtained in our measurement environment. Your results may differ depending on he operating environment.

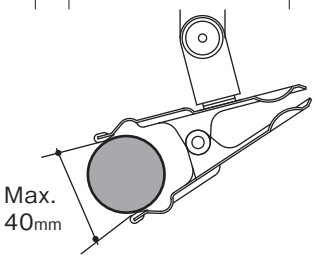

WARNINGS

- Please read the user's manual carefully for safe use.
- Do not use this product in any hazardous areas where the potential for fire or explosion exists such as gases, dust, or easily ignitable materials in the atmosphere.
- Keep liquids away from the unit, such as water, oil, solvent, as some parts are applied with high voltage.
- Prevent dew condensation as it may cause electric shock and product breakage.
- Do not touch the electrode needles as they are applied with high voltage. Also keep your operation tools and wirings away from the unit.

Manufactured by
VESSEL CO., INC.
17-25, Fukae-Kita 2-chome,
Higashinari-ku, Osaka 537-0001 Japan
Tel : +81 6 6976 7778 Fax : +81 6 6972 9441
E-mail : export@vessel.co.jp
URL : http://www.vessel.co.jp/english/

- Product specifications, dimensions, and other information are subject to change without notice.

Distributed by

Printed in Japan

10120821.01

VESSEL®
your solution partner

(Stand type)

High-speed fan makes it!

Ionizing performance keeps fresh and highest even when the filter got dirty.

This unique, super ionizer does not request any spec of installation place and time.

While in operation, the interior LED lights brightly to check for dirt on the electrode needles from outside.

Instant installation with screw holes on its 3 sides (M5×0.8).

By detaching the louver, the needles can be easily cleaned.
Automatic shutoff for electrode over the needles.

STAT-CLEAN F6ST-E

Ionizing Mini-Fan with Stand

EDP No.621631

CE RoHS

VESSEL Ionizing Mini-Fan with Stand No.F6ST-E

VESSEL
your solution partner

Fully-loaded with advanced features

- Highly reliable piezoelectric AC method is adopted for superior ion balance of within ±10V.
- Compact and space-saving. Ideal for installation on cell production benches.
- Fan speed can be switched to HIGH or LOW setting.
- Interior LED light lets you check for dirt on the electrode needles visually.

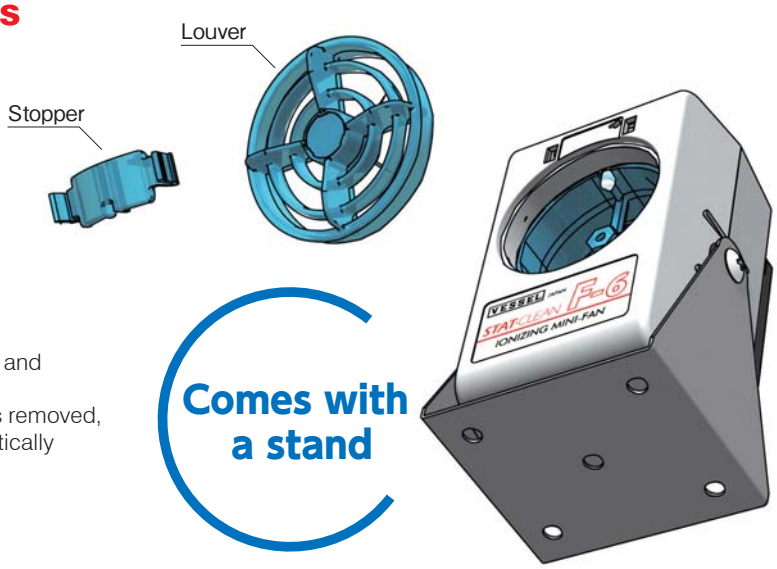

Designed for maximum safety and ease of maintenance

- Low voltage 24V DC power supply minimizes electrical leakage and interference with nearby devices.
- Louver (electrode needle unit) can be detached if the stopper is removed, which improves the efficiency of maintenance. The unit automatically turns off when the stopper is removed.
- Highly efficient ionizing method minimizes ozone production.
- Warning indicator notifies you if the fan locks up or abnormally high voltage is detected.

Specifications

Model No.	F6ST-E (with Stand)
Ionizing method	High-frequency AC corona discharge
Applied voltage	AC3.5kV
Power supply and current consumption	DC24V±5% 253mA(typ.)
H×W×D	Unit only 131×77×81mm (Protruding parts & stand excluded)
Weight	460g (stand included)
Fan speed	0.87m³/min [Fan speed: HI] 0.4m³/min [Fan speed: LOW]
Noise level	58.5dB [Fan speed: HI] 40.4dB [Fan speed: LOW]
Ozone production	0.05ppm or less (measured 50mm from device)
Operating temperature and humidity	5～40℃ 35～65%RH (No condensing, no freezing)
Ionizing distance	150mm～600mm
Decay time	Please refer to the static erasing performance chart.
Ion balance	Within ±10V (measured 300mm from device, before shipment)
Accessories	Power supply transformer No.AD24-ITF6-E AC cable (1.8m)
Replacement parts	Electrode needle unit F-6H Filter SDJ-08F

Dimensions

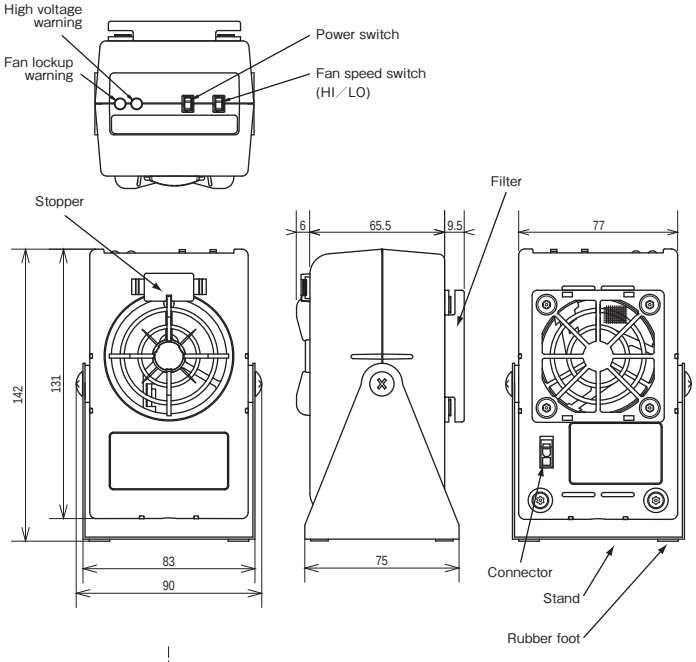

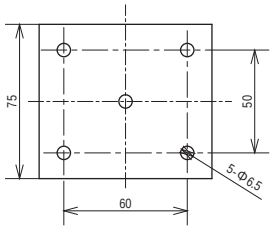

Static erasing performance

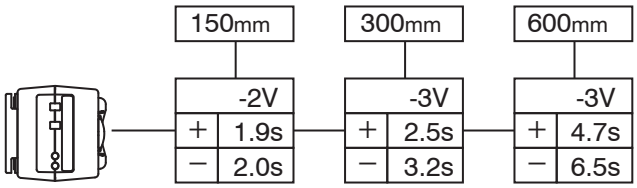

Charged plate monitor:TREK 158, **which conforms to ANSI EOS/ESD S3.1, was used for measurement.**
Measurement conditions: Max. fan speed, **Temperature:** 25℃, **Humidity:** 50%
Top: Ion balance
Middle: Decay time required for static discharge from +1000V to +100V
Bottom: Decay time required for static discharge from –1000V to –100V

※Static electricity erasing capability values given in this catalog were obtained in our measurement environment. Your results may differ depending on he operating environment.

WARNINGS

- Please read the user's manual carefully for safe use.
- Do not use this product in any hazardous areas where the potential for fire or explosion exists such as gases, dust, or easily ignitable materials in the atmosphere.
- Keep liquids away from the unit, such as water, oil, solvent, as some parts are applied with high voltage.
- Prevent dew condensation as it may cause electric shock and product breakage.
- Do not touch the electrode needles as they are applied with high voltage. Also keep your operation tools and wirings away from the unit.

Manufactured by
VESSEL CO., INC.
17-25, Fukae-Kita 2-chome,
Higashinari-ku, Osaka 537-0001 Japan
Tel : +81 6 6976 7778 Fax : +81 6 6972 9441
E-mail : export@vessel.co.jp
URL : http://www.vessel.co.jp/english/

- Product specifications, dimensions, and other information are subject to change without notice.

Distributed by

Printed in Japan

10120821.01